ENGINEERING
TOMORROW

Data sheet

Safety relief valve
Type POV

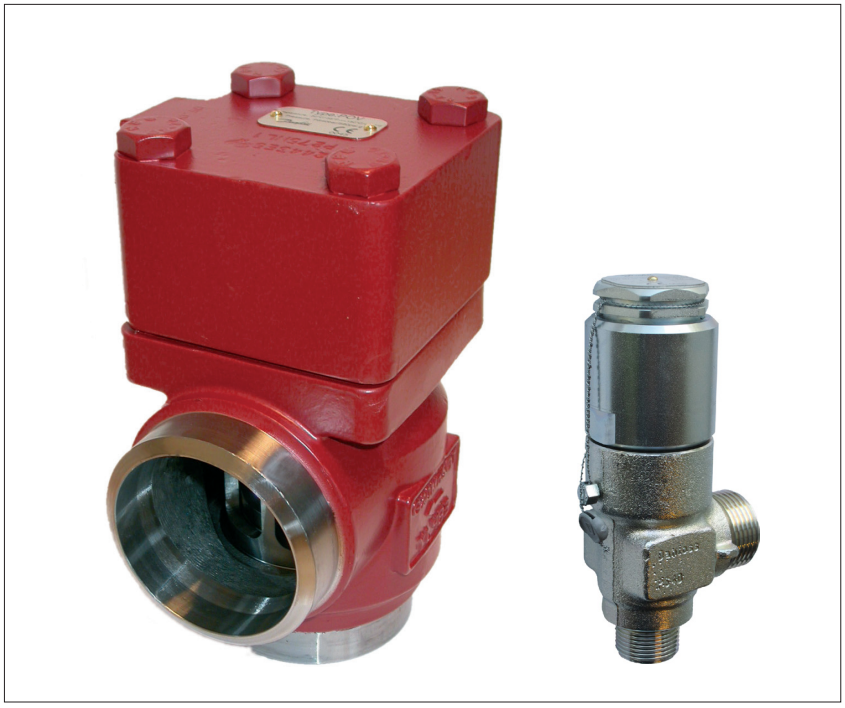

The POV safety relief valve is used in conjunction with the BSV safety relief valve and is specifically designed for protecting compressors against excessive pressure.

Features

- Applicable for the refrigerants HCFC, HFC, R717 (Ammonia), R744 (CO_2).
- The Pilot Operated Internal Safety Valve System POV + BSV is available in sizes from DN 40 to DN 80.
- POV + BSV is an internal safety system thus eliminating the risk of refrigerant leakage to the atmosphere.
- The system renders full protection of the compressor even on increasing back pressure.
- The POV safety relief valve (main valve) has a very large capacity even with high back pressure when compared to direct operating back pressure independent safety valves.
- Small dimensions mean easy handling and installation.
- Classification: DNV, CRN, BV, EAC etc.
  To get an updated list of certification on the products please contact your local Danfoss Sales Company.

Contents

	Page
Features	1
Design	3
Technical data	3
Function	4
Installation of compressor safety valve POV + BSV	5
Capacity	7
Material specification	14
Connections	15
Dimensions and weights	15
Ordering	16

Design

Connections
Available with the following connections:
- Welding DIN (2448)
- Welding ANSI (B 36.10):
  DN 40, Schedule 80,
  DN 65 - 80, Schedule 40

Control/Identification
All pilot valves (BSV 8 Safety Relief Valves) are adjusted, tested and sealed before leaving Danfoss A/S. For that reason Danfoss can only guarantee correct operation, as long as the seal remains unbroken.

Transport/Handling
POV and BSV are supplied separately from Danfoss. BSV safety valves are fitted with special protection covers and packed in purpose made cartons. POV valves are provided with protection covers. It is important that the protective covers remain fitted until the valve is installed.

To ensure the exact and precise operation of the valve it must be handled with care.

Installation
To ensure exact operation of the valve it should be installed with the spring housing upwards (refer to "Installation of compressor safety valve POV + BSV" on the following pages).

When the valve is mounted, it is important to avoid the influence of static, dynamic and thermal stress.

Re-calibration/servicing
In certain countries the authorities demand that the valves are readjusted at least once a year (see local rules).

Capacity
The design and construction of the safety relief valve has been tested and approved by TÜV. This test comprises control of the function of the valve as well as measuring of the capacity, which is the basis of the curves and tables on the following pages.

Pressure Equipment Directive (PED)
POV valves are approved according to the European standard specified in the Pressure Equipment Directive and are CE marked.

For further details / restrictions - see Installation Instruction.

POV valves		
Nominal bore	DN40 mm (1½ in.)	DN65-80 mm (2½ - 3 in.)
Classified for	Fluid group I	
Category	I	II

Technical data

- *Refrigerants*
  Applicable for the refrigerants HCFC, HFC, R717 (Ammonia), R744 (CO_2)
  Flammable hydrocarbons are not recommended. For further information please contact your local Danfoss Sales Company.
- *Pressure*
  The valve is designed for:
  Pressure setting range:
  15 - 25 bar g (218 - 363 psi g)
  Strength test:
  50 bar g (725 psig)
  Leakage test:
  25 bar g (363 psig)
  PB/MWP:
  40 bar (580 psig)
- Temperature range
  –50/+150°C (–58/+302°F)

Function

Pilot valve BSV 8
The pilot valve is actuated by the high pressure P_1 and the back pressure $P_{2'}$. The reference pressure in the stainless steel bellow (1) P_0 is the atmospheric pressure. The effective area of the bellows is equivalent to the area of the valve seating, so the back pressure $P_{2'}$ does not affect the opening pressure of the valve.

Main valve POV
The main valve is of the normally closed (N.C.) type. The high pressure P_1 acts on the valve inlet side of the valve cone (2). P_1 pressure also passes through the piston rod (3) to the upper chamber (4) of the valve, acting on the top of the piston (5). The area of the piston is larger than the area of the valve seat and this together with the spring pressure keeps the valve closed.

System BSV 8 + POV
When the pressure P_1 reaches the set pressure of the pilot valve, it starts opening. The pressure of the pilot line $P_{2'}$ and of the lower chamber (6) of the main valve increases. The pressure of the lower chamber is limited by flow through the nozzle (7). When the flow through the pilot valve exceeds the capacity of the nozzle, the pressure of the chamber (6) increases, providing the opening of the main valve. When the pressure P_1 is reduced, the pilot valve closes, and the pressure $P_{2'}$ is equalized through the nozzle (7). The spring then closes the main valve. The closing time is ≤30 seconds.

fig. 1, Inactive system (closed valve)

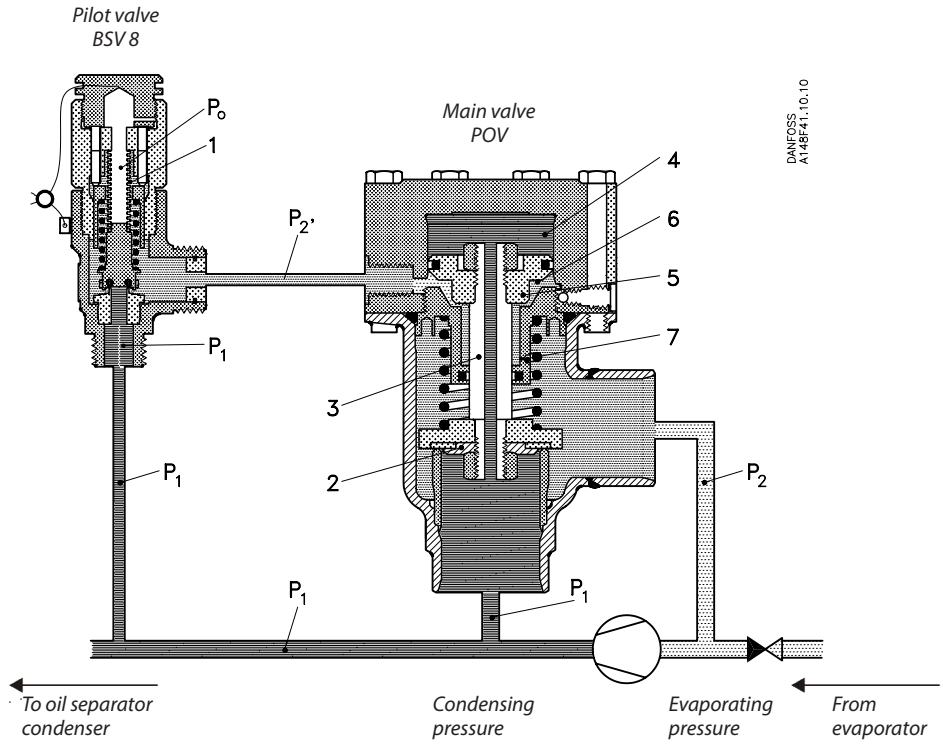

fig. 2, Active system (open valve)

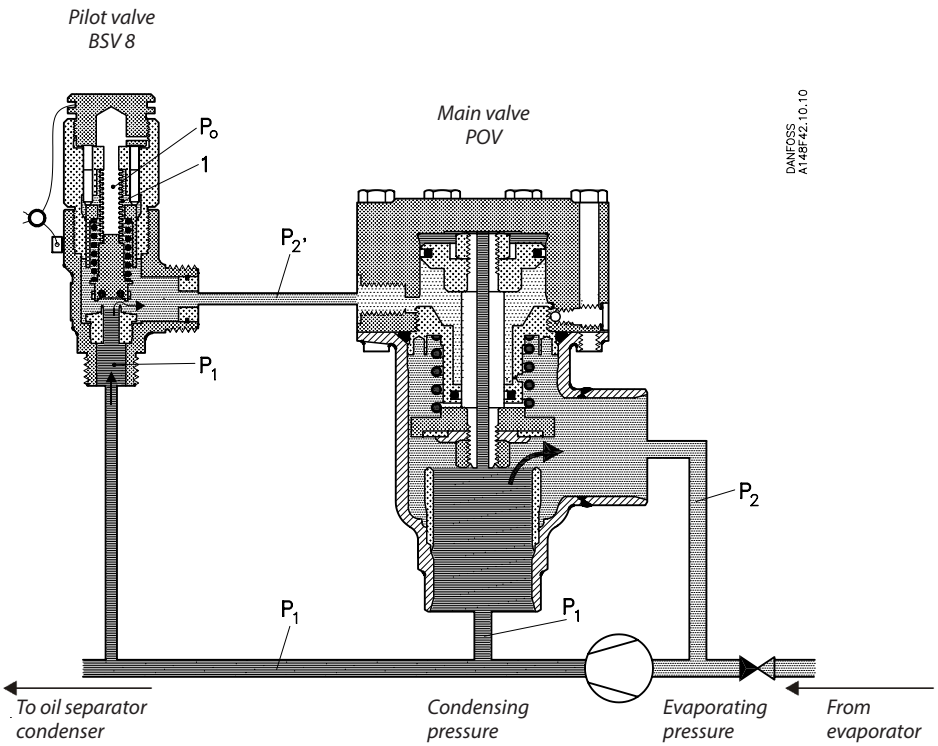

Installation of compressor safety valve POV + BSV

Set pressure
The BSV 8 set pressure is factory set in the range 15 - 25 bar g (145 - 363 psi g), where 15 bar g is the minimum value for this application (fig 4).

Standard set pressures: 18.0, 21.0, or 25.0 bar g (261, 305 or 363 psi g).

The operational pressure of the plant should be at least 15% below the set pressure of the pilot valve, and the opening pressure of the pilot valve (p_{set} + 10%) must be below the reseating pressure of the safety valve protecting the plant. This implies a perfect operation of the plant.

Back pressure
P_{2-0} is the effective back pressure of the POV main valve $P_{2-0} = P_{2-1} + \Delta_{Poutlet}$ where $\Delta_{Poutlet}$ is the pressure loss in the outlet line of POV (2).

P_{2-1} Is normally equal to the evaporating pressure. P_{2-0} must not exceed the limits in fig 4.

Pressure loss in inlet line
The pressure loss in the inlet line of the POV (1) will not affect the function of the POV + BSV system, but a high pressure drop will reduce the capacity.
If the pressure drop in the inlet line ΔP_{inlet} exceed 3% of the opening pressure, the capacity reduction must be taken into consideration by calculation.

Pressure drop in the pilot inlet line
In order to ensure a proper function of the POV + BSV system, the pilot valve must be activated by the plant pressure. It is important that the inlet line of the pilot valve is mounted in a way which ensures that the pilot pressure is identical with the plant pressure. If the pilot pressure is mounted in the inlet line of the POV valve, it must be verified that the pressure drop in the pilot inlet line (3) ΔP_{inlet} does not exceed 3% of the opening pressure.

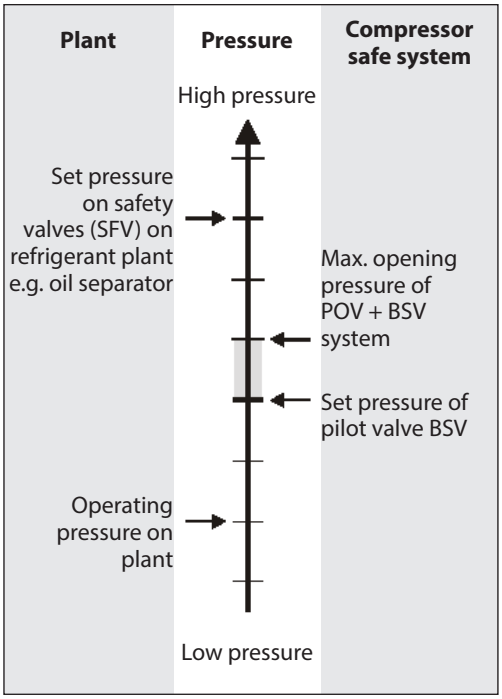

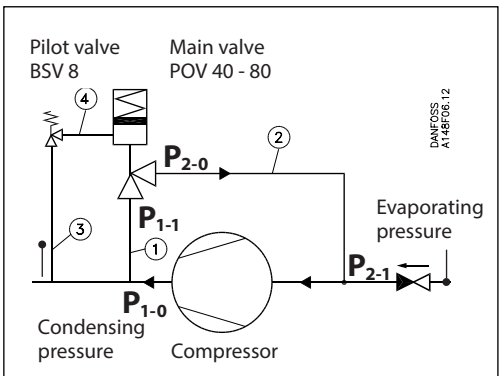

Fig. 3.

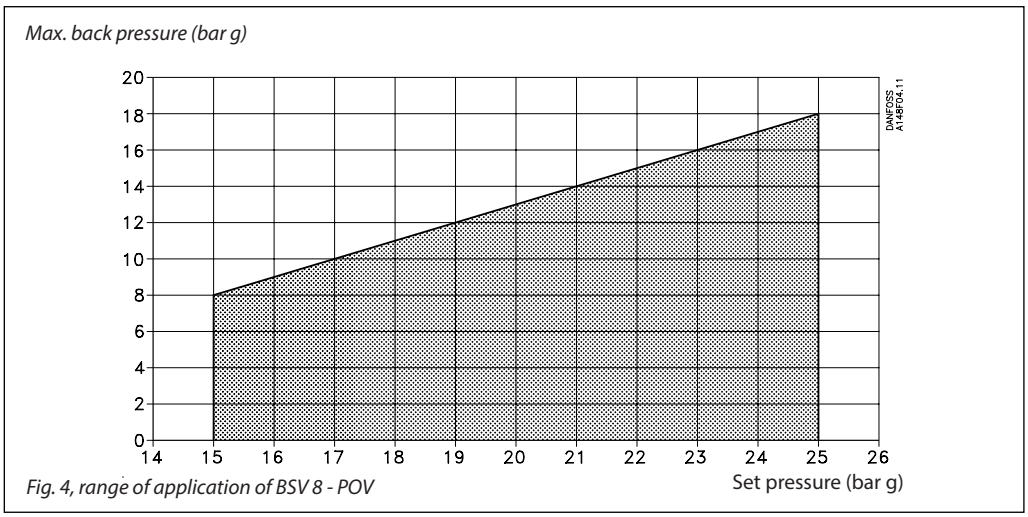

Fig. 4, range of application of BSV 8 - POV

Installation of compressor safety valve POV + BSV
(continued)

Important: When locating the inlet line to the pilot valve, it is important that the connection is mounted in the gas phase and not in an oil phase, if any.

Pressure drop in the pilot outlet line
The pressure loss in the BSV outlet line (4) $\Delta P_{P\text{-}outlet}$ is not critical.
Minimum internal diameter of the pilot outlet line 8 mm (0.314 in.)
Maximum length of pilot outlet line 1 m (3.25 ft)

Note: The Above mentioned guide lines are securing a safe function of the POV + BSV system, but there might be restrictions from national authorities.

Fig. 5 shows a typical application of the POV + BSV system. In the example a non return valve has been mounted in the suction line, as well as a shut-off valve in the pressure line. It is good practise and a demand from the authorities of most countries to mount a safety valve on the oil separator.

If the shut-off valve in the pressure line is closed, and all regulation equipment fails, the pressure after the compressor will rise, and the BSV + POV system is activated. Provided that the required motor effect is present, there will be a rise in temperature caused by the compression work, followed by a rise in pressure. Therefore, the safety relief valve of the oil separator must, besides being dimensioned for "normal" heat input, also be dimensioned for heat input, corresponding to the effect of the motor.

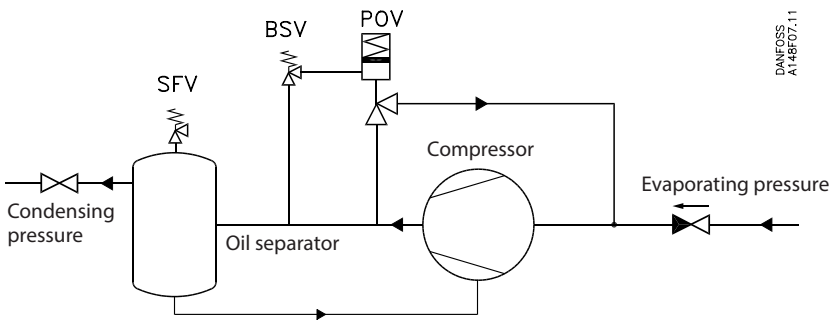

Fig. 5

Capacity

The values in the table are based on saturated gas and with 50K superheat.

If other operating conditions have to be taken into consideration, the formulas or the Danfoss computation program (Coolselector®2) can be used.

Table 1

Version	Nominal size		Flow diameter	Flow area	De-rated, certified coefficient of discharge
	Inlet	Outlet	d_0	A_0	K_{dr}
POV 600	40 mm	40 mm	32.6 mm	835 mm²	0.74
	1½ in.	1½ in.	1.28 in.	1.28 in²	
POV 1050	65 mm	65 mm	39.8 mm	1244 mm²	0.86
	2½ in.	2½ in.	1.56 in.	1.93 in²	
POV 2150	80 mm	80 mm	59 mm	2734 mm²	0.8
	3 in.	3 in.	2.32 in.	4.24 in²	

The discharge capacity of the safety relief valves are based on (IS0 4126-1/EN 1268-1 / prEN 1313 6 (1998)).

$$q_m = 0.2883 \times C \times A_0 \times K_{dr} \times K_b \times \sqrt{\frac{p}{v}}$$

q_m Discharge capacity (kg/h)
C Discharge function depending of the actual refrigerant (κ) see table 2 (-)
A_0 Flow area of the safety relief valve (mm²).
K_{dr} De-rated coefficient of discharge ($K_{dr} = K_d \times 0.9$), (the K_{dr} is certified by TÜV) see table 1. (-)
K_b Correction factor for sub-critical flow. (-)
$K_b = 1.0$ when the back pressure is lower than approx. 0.5 × relieving pressure ($P_b < 0.5 \times p$).
For all BSV safety valves $K_b = 1.0$
v Specific volume of the vapour. (m³/kg)
p_{set} Set pressure, the predetermined pressure at which a pressure relief valve under operation starts to open (p_{set} is indicated on the metal plate on the safety relief valve). (bar gauge)
p_{atm} Atmospheric pressure. (1 bar)
p Relieving pressure, $p = p_{set} \times 1.1 + P_{atm}$ (bar absolute)

For further details see the above mentioned ISO or EN standards.

Important!
For back pressure higher than 0.5 × p, the Danfoss computer program (DIRcalc™) or the above mentioned standard must be used when calculating the capacity.

Table 2. Properties of Refrigerants

Refrigerant number	Isentropic exponent κ	Discharge function C
R 22	1.17	2.54
R 134a	1.12	2.50
R 404A	1.12	2.49
R 410A	1.17	2.54
R 717 (Ammonia)	1.31	2.64
R 744 (CO_2)	1.30	2.63
Air	1.40	2.70

Capacity - POV 600

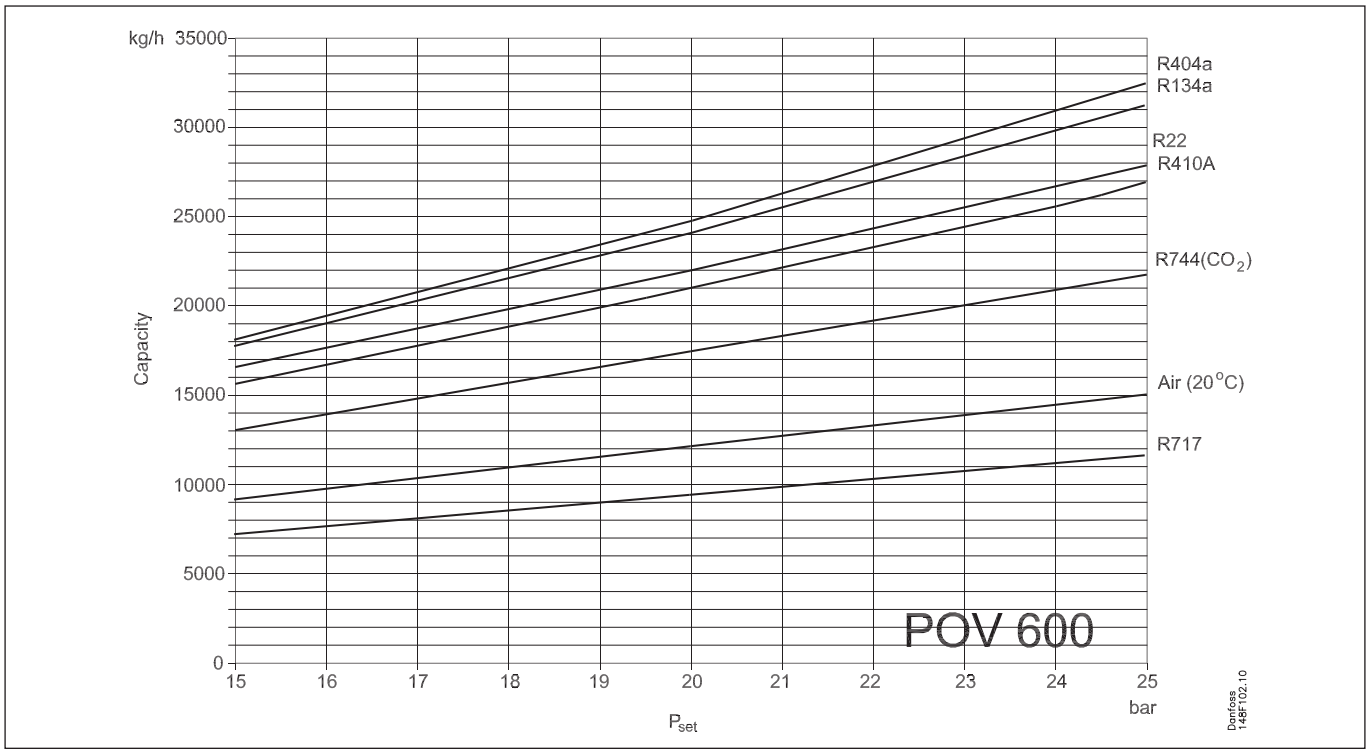

Calculation based on the formula $q_m = 0.2883 \times C \times A_0 \times K_{dr} \times K_b \times \sqrt{\frac{p}{v}}$

P_{set}	Set pressure in bar g
P	Relieving pressure in bar a
C	Discharge function
v	Specific volume of the vapour at the relieving pressure P in m^3/kg
q_m	Discharge capacity in kg/h
K_b	Correction factor for sub-critical flow
d_o	Flow diameter seat mm^2
A_o	Flow area seat in mm^2
K_{dr}	De-rated coefficient of discharge at defined lifting height

P_{set}		P		R22	q_m		R134a	q_m		R404a	q_m		R717	q_m	
bar g	psi g	bar a	psi a	v	kg/h	lb/min	v	kg/h	lb/min	v	kg/h	lb/min	v	kg/h	lb/min
10	145	12.0	174	0.01974	11077	407	0.01655	11907	437	0.01629	11953	439	0.10753	4933	181
11	160	13.1	190	0.01797	12130	446	0.01502	13059	480	0.01470	13147	483	0.09867	5380	198
12	174	14.2	206	0.01638	13228	486	0.01383	14169	521	0.01346	14305	526	0.09130	5823	214
13	189	15.3	222	0.01514	14281	525	0.01273	15330	563	0.01233	15514	570	0.08461	6279	231
14	203	16.4	238	0.01400	15376	565	0.01172	16475	605	0.01128	16793	617	0.07900	6728	247
15	218	17.5	254	0.01311	16414	603	0.01094	17685	650	0.01048	17997	661	0.07383	7189	264
16	232	18.6	270	0.01229	17477	642	0.01007	19004	698	0.00973	19256	708	0.06998	7613	280
17	247	19.7	286	0.01152	18578	683	0.00940	20243	744	0.00902	20582	756	0.06636	8045	296
18	261	20.8	302	0.01080	19716	724	0.00888	21400	786	0.00842	21889	804	0.06213	8544	314
19	276	21.9	318	0.01012	20899	768	0.00828	22741	836	0.00786	23247	854	0.05898	8998	331
20	290	23.0	334	0.00961	21978	808	0.00775	24089	885	0.00738	24586	903	0.05620	9446	347
21	305	24.1	350	0.00908	23145	850	0.00727	25459	935	0.00688	26066	958	0.05350	9910	364
22	319	25.2	365	0.00861	24305	893	0.00685	26820	985	0.00645	27528	1011	0.05121	10358	381
23	334	26.3	381	0.00810	25599	941	0.00645	28235	1037	0.00606	29013	1066	0.04900	10818	397
24	348	27.4	397	0.00768	26834	986	0.00606	29733	1092	0.00565	30670	1127	0.04687	11290	415
25	363	28.5	413	0.00738	27918	1026	0.00574	31158	1145	0.00530	32295	1187	0.04514	11733	431
26	377	29.6	429	0.00699	29235	1074	0.00541	32707	1202	0.00496	34022	1250	0.04348	12183	448
27	392	30.7	445	0.00670	30410	1117	0.00506	34442	1266	0.00463	35862	1318	0.04150	12700	467
28	406	31.8	461	0.00634	31817	1169	0.00479	36028	1324	0.00429	37918	1393	0.04010	13149	483
29	421	32.9	477	0.00607	33075	1215	0.00453	37683	1385	0.00401	39892	1466	0.03870	13615	500
30	435	34.0	493	0.00579	34426	1265	0.00422	39690	1458	0.00371	42161	1549	0.03730	14098	518
31	450	35.1	509	0.00552	35824	1316	0.00392	41842	1537	0.00339	44814	1647	0.03612	14556	535
32	464	36.2	525	0.00523	37376	1373	0.00365	44036	1618	0.00300	48378	1778	0.03482	15056	553
33	479	37.3	541	0.00499	38841	1427	0.00337	46520	1709	0.00206	59262	2178	0.03370	15535	571
34	493	38.4	557	0.00475	40393	1484	0.00306	49534	1820				0.03276	15987	587
35	508	39.5	573	0.00452	41997	1543	0.00275	52994	1947				0.03158	16514	607
36	522	40.6	589	0.00428	43755	1608	0.00221	59933	2202				0.03083	16945	623
37	537	41.7	605	0.00408	45418	1669							0.02972	17491	643
38	551	42.8	621	0.00389	47124	1731							0.02901	17935	659
39	566	43.9	637	0.00365	49269	1810							0.02815	18440	678
40	580	45.0	653	0.00345	51308	1885							0.02740	18923	695

Capacity - POV 600

(Continued)

P_{set}		P		Air(20°C)	q_m		R410a	q_m		R744 (CO_2)	q_m	
bar g	psi g	bar a	psi a	v	kg/h	lb/min	v	kg/h	lb/min	v	kg/h	lb/min
10	145	12.0	174	0.06790	6349	233	0.02213	10461	384	0.03196	9014	331
11	160	13.1	190	0.06220	6931	255	0.02022	11435	420	0.02930	9836	361
12	174	14.2	206	0.05738	7513	276	0.01848	12453	458	0.02690	10688	393
13	189	15.3	222	0.05325	8095	297	0.01690	13517	497	0.02514	11476	422
14	203	16.4	238	0.04968	8676	319	0.01569	14525	534	0.02352	12283	451
15	218	17.5	254	0.04656	9258	340	0.01457	15570	572	0.02201	13117	482
16	232	18.6	270	0.04381	9840	362	0.01353	16657	612	0.02061	13974	513
17	247	19.7	286	0.04136	10422	383	0.01275	17659	649	0.01932	14854	546
18	261	20.8	302	0.03917	11004	404	0.01201	18696	687	0.01825	15704	577
19	276	21.9	318	0.03721	11586	426	0.01132	19760	726	0.01726	16570	609
20	290	23.0	334	0.03543	12168	447	0.01060	20927	769	0.01645	17394	639
21	305	24.1	350	0.03381	12750	468	0.00995	22110	812	0.01560	18283	672
22	319	25.2	365	0.03233	13332	490	0.00944	23212	853	0.01485	19162	704
23	334	26.3	381	0.03098	13914	511	0.00887	24463	899	0.01420	20019	736
24	348	27.4	397	0.02974	14496	533	0.00847	25552	939	0.01355	20918	769
25	363	28.5	413	0.02859	15078	554	0.00795	26899	988	0.01299	21789	801
26	377	29.6	429	0.02753	15660	575	0.00758	28074	1032	0.01239	22736	835
27	392	30.7	445	0.02654	16242	597	0.00722	29295	1076	0.01185	23677	870
28	406	31.8	461	0.02562	16824	618	0.00687	30565	1123	0.01145	24515	901
29	421	32.9	477	0.02477	17406	640	0.00653	31888	1172	0.01093	25521	938
30	435	34.0	493	0.02396	17988	661	0.00621	33242	1221	0.01059	26358	968
31	450	35.1	509	0.02321	18570	682	0.00589	34681	1274	0.01015	27355	1005
32	464	36.2	525	0.02251	19152	704	0.00558	36185	1330	0.00978	28301	1040
33	479	37.3	541	0.02184	19734	725	0.00530	37688	1385	0.00948	29179	1072
34	493	38.4	557	0.02122	20316	746	0.00508	39059	1435	0.00910	30217	1110
35	508	39.5	573	0.02063	20898	768	0.00478	40839	1501	0.00875	31254	1148
36	522	40.6	589	0.02007	21479	789	0.00455	42437	1559	0.00847	32206	1183
37	537	41.7	605	0.01954	22062	811	0.00430	44241	1626	0.00820	33172	1219
38	551	42.8	621	0.01904	22643	832	0.00409	45957	1689	0.00794	34153	1255
39	566	43.9	637	0.01856	23225	853	0.00385	47973	1763	0.00768	35169	1292
40	580	45.0	653	0.01811	23808	875	0.00362	50089	1840	0.00743	36201	1330

Capacity - POV 1050

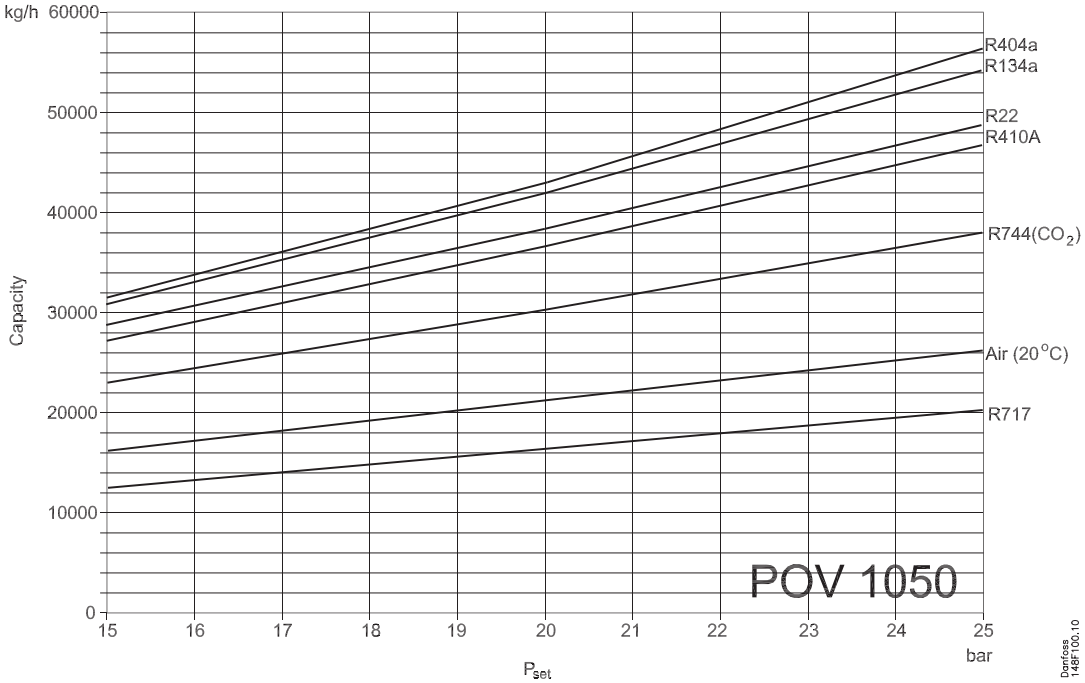

Calculation based on the formula $q_m = 0.2883 \times C \times A_0 \times K_{dr} \times K_b \times \sqrt{\frac{p}{v}}$

P_{set}	Set pressure in bar g
P	Relieving pressure in bar a
C	Discharge function
v	Specific volume of the vapour at the relieving pressure P in m^3/kg
q_m	Discharge capacity in kg/h
K_b	Correction factor for sub-critical flow
d_o	Flow diameter seat mm^2
A_o	Flow area seat in mm^2
K_{dr}	De-rated coefficient of discharge at defined lifting height

P_{set}		P		R22	q_m		R134a	q_m		R404a	q_m		R717	q_m	
bar g	psi g	bar a	psi a	v	kg/h	lb/min	v	kg/h	lb/min	v	kg/h	lb/min	v	kg/h	lb/min
10	145	12.0	174	0.01974	19295	709	0.01655	20741	762	0.01629	20822	765	0.10753	8593	316
11	160	13.1	190	0.01797	21129	776	0.01502	22748	836	0.01470	22902	841	0.09867	9372	344
12	174	14.2	206	0.01638	23042	847	0.01383	24681	907	0.01346	24918	916	0.09130	10144	373
13	189	15.3	222	0.01514	24878	914	0.01273	26703	981	0.01233	27024	993	0.08461	10938	402
14	203	16.4	238	0.01400	26785	984	0.01172	28698	1054	0.01128	29252	1075	0.07900	11719	431
15	218	17.5	254	0.01311	28592	1051	0.01094	30807	1132	0.01048	31350	1152	0.07383	12523	460
16	232	18.6	270	0.01229	30444	1119	0.01007	33104	1216	0.00973	33542	1232	0.06998	13261	487
17	247	19.7	286	0.01152	32362	1189	0.00940	35262	1296	0.00902	35853	1317	0.06636	14015	515
18	261	20.8	302	0.01080	34344	1262	0.00888	37279	1370	0.00842	38130	1401	0.06213	14883	547
19	276	21.9	318	0.01012	36405	1338	0.00828	39613	1456	0.00786	40495	1488	0.05898	15674	576
20	290	23.0	334	0.00961	38285	1407	0.00775	41961	1542	0.00738	42828	1574	0.05620	16455	605
21	305	24.1	350	0.00908	40317	1481	0.00727	44348	1630	0.00688	45405	1668	0.05350	17264	634
22	319	25.2	365	0.00861	42338	1556	0.00685	46718	1717	0.00645	47953	1762	0.05121	18043	663
23	334	26.3	381	0.00810	44593	1638	0.00645	49185	1807	0.00606	50540	1857	0.04900	18844	692
24	348	27.4	397	0.00768	46744	1718	0.00606	51793	1903	0.00565	53425	1963	0.04687	19666	723
25	363	28.5	413	0.00738	48632	1787	0.00574	54275	1994	0.00530	56257	2067	0.04514	20438	751
26	377	29.6	429	0.00699	50925	1871	0.00541	56975	2093	0.00496	59265	2178	0.04348	21223	780
27	392	30.7	445	0.00670	52974	1946	0.00506	59997	2205	0.00463	62470	2295	0.04150	22123	813
28	406	31.8	461	0.00634	55424	2036	0.00479	62760	2306	0.00429	66051	2427	0.04010	22905	842
29	421	32.9	477	0.00607	57614	2117	0.00453	65642	2412	0.00401	69489	2553	0.03870	23716	871
30	435	34.0	493	0.00579	59969	2203	0.00422	69138	2540	0.00371	73442	2699	0.03730	24557	902
31	450	35.1	509	0.00552	62404	2293	0.00392	72886	2678	0.00339	78063	2868	0.03612	25356	932
32	464	36.2	525	0.00523	65107	2392	0.00365	76708	2819	0.00300	84273	3096	0.03482	26226	964
33	479	37.3	541	0.00499	67660	2486	0.00337	81035	2978	0.00206	103232	3793	0.03370	27061	994
34	493	38.4	557	0.00475	70363	2585	0.00306	86286	3170				0.03276	27848	1023
35	508	39.5	573	0.00452	73157	2688	0.00275	92314	3392				0.03158	28767	1057
36	522	40.6	589	0.00428	76220	2801	0.00221	104400	3836				0.03083	29517	1085
37	537	41.7	605	0.00408	79116	2907							0.02972	30468	1120
38	551	42.8	621	0.00389	82087	3016							0.02901	31243	1148
39	566	43.9	637	0.00365	85825	3154							0.02815	32121	1180
40	580	45.0	653	0.00345	89377	3284							0.02740	32963	1211

Capacity - POV 1050

(Continued)

P_{set}		P		**Air(20°C)**	q_m		**R410a**	q_m		**R744 (CO_2)**	q_m	
bar g	psi g	bar a	psi a	v	kg/h	lb/min	v	kg/h	lb/min	v	kg/h	lb/min
10	145	12.0	174	0.06790	11059	406	0.02213	18223	670	0.03196	15701	577
11	160	13.1	190	0.06220	12073	444	0.02022	19919	732	0.02930	17134	630
12	174	14.2	206	0.05738	13087	481	0.01848	21693	797	0.02690	18617	684
13	189	15.3	222	0.05325	14100	518	0.01690	23547	865	0.02514	19990	735
14	203	16.4	238	0.04968	15114	555	0.01569	25301	930	0.02352	21397	786
15	218	17.5	254	0.04656	16128	593	0.01457	27122	997	0.02201	22849	840
16	232	18.6	270	0.04381	17141	630	0.01353	29016	1066	0.02061	24343	894
17	247	19.7	286	0.04136	18155	667	0.01275	30761	1130	0.01932	25875	951
18	261	20.8	302	0.03917	19169	704	0.01201	32568	1197	0.01825	27356	1005
19	276	21.9	318	0.03721	20183	742	0.01132	34421	1265	0.01726	28864	1061
20	290	23.0	334	0.03543	21197	779	0.01060	36453	1339	0.01645	30299	1113
21	305	24.1	350	0.03381	22210	816	0.00995	38515	1415	0.01560	31849	1170
22	319	25.2	365	0.03233	23224	853	0.00944	40434	1486	0.01485	33380	1227
23	334	26.3	381	0.03098	24238	891	0.00887	42613	1566	0.01420	34873	1281
24	348	27.4	397	0.02974	25251	928	0.00847	44510	1635	0.01355	36438	1339
25	363	28.5	413	0.02859	26265	965	0.00795	46856	1722	0.01299	37955	1395
26	377	29.6	429	0.02753	27279	1002	0.00758	48903	1797	0.01239	39606	1455
27	392	30.7	445	0.02654	28293	1040	0.00722	51030	1875	0.01185	41244	1515
28	406	31.8	461	0.02562	29307	1077	0.00687	53243	1956	0.01145	42703	1569
29	421	32.9	477	0.02477	30321	1114	0.00653	55548	2041	0.01093	44457	1634
30	435	34.0	493	0.02396	31334	1151	0.00621	57906	2128	0.01059	45914	1687
31	450	35.1	509	0.02321	32348	1189	0.00589	60412	2220	0.01015	47651	1751
32	464	36.2	525	0.02251	33361	1226	0.00558	63033	2316	0.00978	49299	1811
33	479	37.3	541	0.02184	34375	1263	0.00530	65651	2412	0.00948	50828	1868
34	493	38.4	557	0.02122	35389	1300	0.00508	68040	2500	0.00910	52637	1934
35	508	39.5	573	0.02063	36403	1338	0.00478	71140	2614	0.00875	54443	2000
36	522	40.6	589	0.02007	37416	1375	0.00455	73924	2716	0.00847	56101	2061
37	537	41.7	605	0.01954	38430	1412	0.00430	77066	2832	0.00820	57784	2123
38	551	42.8	621	0.01904	39444	1449	0.00409	80055	2942	0.00794	59492	2186
39	566	43.9	637	0.01856	40458	1487	0.00385	83566	3071	0.00768	61263	2251
40	580	45.0	653	0.01811	41472	1524	0.00362	87253	3206	0.00743	63061	2317

Capacity - POV 2150

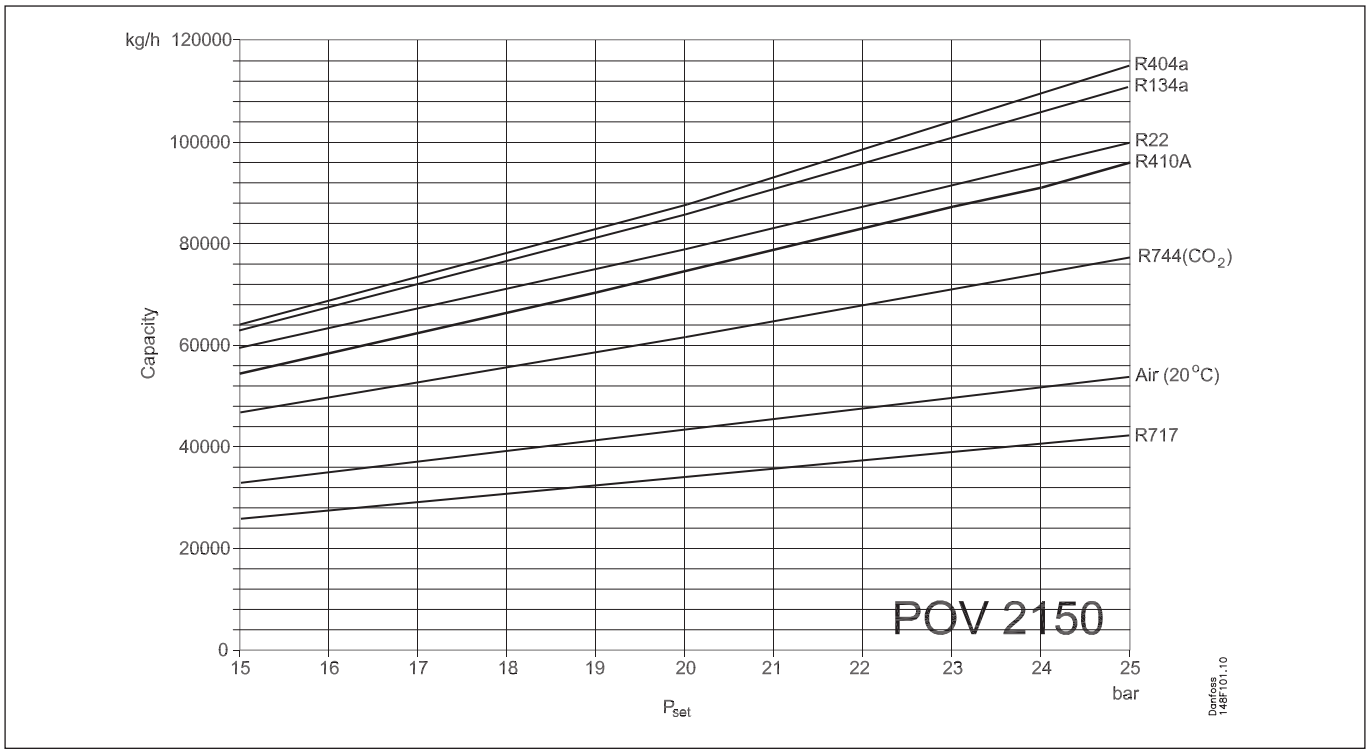

Calculation based on the formula $q_m = 0.2883 \times C \times A_0 \times K_{dr} \times K_b \times \sqrt{\frac{p}{v}}$

P_{set}	Set pressure in bar g
P	Relieving pressure in bar a
C	Discharge function
v	Specific volume of the vapour at the relieving pressure P in m^3/kg
q_m	Discharge capacity in kg/h
K_b	Correction factor for sub-critical flow
d_o	Flow diameter seat mm^2
A_o	Flow area seat in mm^2
K_{dr}	De-rated coefficient of discharge at defined lifting height

P_{set}		P		R22	q_m		R134a	q_m		R404a	q_m		R717	q_m	
bar g	psi g	bar a	psi a	v	kg/h	lb/min	v	kg/h	lb/min	v	kg/h	lb/min	v	kg/h	lb/min
10	145	12.0	174	0.01974	39440	1449	0.01655	42395	1558	0.01629	42561	1564	0.10753	17564	645
11	160	13.1	190	0.01797	43190	1587	0.01502	46497	1708	0.01470	46812	1720	0.09867	19157	704
12	174	14.2	206	0.01638	47098	1731	0.01383	50450	1854	0.01346	50934	1871	0.09130	20735	762
13	189	15.3	222	0.01514	50851	1868	0.01273	54583	2006	0.01233	55239	2030	0.08461	22358	821
14	203	16.4	238	0.01400	54749	2012	0.01172	58660	2155	0.01128	59793	2197	0.07900	23955	880
15	218	17.5	254	0.01311	58444	2147	0.01094	62970	2314	0.01048	64080	2355	0.07383	25597	941
16	232	18.6	270	0.01229	62230	2287	0.01007	67665	2486	0.00973	68562	2519	0.06998	27106	996
17	247	19.7	286	0.01152	66149	2431	0.00940	72077	2648	0.00902	73285	2693	0.06636	28646	1053
18	261	20.8	302	0.01080	70200	2579	0.00888	76199	2800	0.00842	77940	2864	0.06213	30421	1118
19	276	21.9	318	0.01012	74413	2734	0.00828	80972	2975	0.00786	82774	3041	0.05898	32038	1177
20	290	23.0	334	0.00961	78257	2875	0.00775	85771	3152	0.00738	87543	3217	0.05620	33635	1236
21	305	24.1	350	0.00908	82411	3028	0.00727	90650	3331	0.00688	92811	3410	0.05350	35287	1297
22	319	25.2	365	0.00861	86540	3180	0.00685	95495	3509	0.00645	98018	3602	0.05121	36882	1355
23	334	26.3	381	0.00810	91150	3349	0.00645	100536	3694	0.00606	103306	3796	0.04900	38518	1415
24	348	27.4	397	0.00768	95546	3511	0.00606	105868	3890	0.00565	109203	4013	0.04687	40199	1477
25	363	28.5	413	0.00738	99406	3653	0.00574	110941	4076	0.00530	114992	4225	0.04514	41776	1535
26	377	29.6	429	0.00699	104094	3825	0.00541	116459	4279	0.00496	121141	4451	0.04348	43380	1594
27	392	30.7	445	0.00670	108281	3979	0.00506	122636	4506	0.00463	127692	4692	0.04150	45220	1662
28	406	31.8	461	0.00634	113289	4163	0.00479	128284	4714	0.00429	135011	4961	0.04010	46820	1720
29	421	32.9	477	0.00607	117767	4327	0.00453	134176	4930	0.00401	142040	5219	0.03870	48477	1781
30	435	34.0	493	0.00579	122580	4504	0.00422	141322	5193	0.00371	150120	5516	0.03730	50197	1844
31	450	35.1	509	0.00552	127557	4687	0.00392	148983	5474	0.00339	159565	5863	0.03612	51829	1904
32	464	36.2	525	0.00523	133083	4890	0.00365	156795	5761	0.00300	172258	6329	0.03482	53608	1970
33	479	37.3	541	0.00499	138300	5082	0.00337	165640	6086	0.00206	211011	7753	0.03370	55313	2032
34	493	38.4	557	0.00475	143826	5285	0.00306	176372	6481				0.03276	56922	2092
35	508	39.5	573	0.00452	149537	5495	0.00275	188694	6933				0.03158	58801	2161
36	522	40.6	589	0.00428	155797	5725	0.00221	213399	7841				0.03083	60334	2217
37	537	41.7	605	0.00408	161717	5942							0.02972	62278	2288
38	551	42.8	621	0.00389	167790	6165							0.02901	63861	2346
39	566	43.9	637	0.00365	175430	6446							0.02815	65657	2412
40	580	45.0	653	0.00345	182690	6713							0.02740	67378	2476

Capacity - POV 2150

(Continued)

P_{set}		P		**Air(20°C)**	q_m		**R410a**	q_m		**R744 (CO_2)**	q_m	
bar g	psi g	bar a	psi a	v	kg/h	lb/min	v	kg/h	lb/min	v	kg/h	lb/min
10	145	12.0	174	0.06790	22605	831	0.02213	37249	1369	0.03196	32094	1179
11	160	13.1	190	0.06220	24677	907	0.02022	40716	1496	0.02930	35022	1287
12	174	14.2	206	0.05738	26750	983	0.01848	44342	1629	0.02690	38055	1398
13	189	15.3	222	0.05325	28822	1059	0.01690	48131	1768	0.02514	40861	1501
14	203	16.4	238	0.04968	30894	1135	0.01569	51717	1900	0.02352	43737	1607
15	218	17.5	254	0.04656	32966	1211	0.01457	55438	2037	0.02201	46704	1716
16	232	18.6	270	0.04381	35038	1287	0.01353	59310	2179	0.02061	49757	1828
17	247	19.7	286	0.04136	37110	1364	0.01275	62878	2310	0.01932	52890	1943
18	261	20.8	302	0.03917	39183	1440	0.01201	66570	2446	0.01825	55917	2055
19	276	21.9	318	0.03721	41254	1516	0.01132	70359	2585	0.01726	58999	2168
20	290	23.0	334	0.03543	43327	1592	0.01060	74513	2738	0.01645	61933	2276
21	305	24.1	350	0.03381	45399	1668	0.00995	78726	2893	0.01560	65101	2392
22	319	25.2	365	0.03233	47471	1744	0.00944	82648	3037	0.01485	68230	2507
23	334	26.3	381	0.03098	49543	1820	0.00887	87103	3201	0.01420	71281	2619
24	348	27.4	397	0.02974	51615	1897	0.00847	90981	3343	0.01355	74481	2737
25	363	28.5	413	0.02859	53687	1973	0.00795	95776	3519	0.01299	77582	2851
26	377	29.6	429	0.02753	55760	2049	0.00758	99961	3673	0.01239	80956	2975
27	392	30.7	445	0.02654	57832	2125	0.00722	104308	3833	0.01185	84305	3098
28	406	31.8	461	0.02562	59904	2201	0.00687	108831	3999	0.01145	87287	3207
29	421	32.9	477	0.02477	61977	2277	0.00653	113543	4172	0.01093	90872	3339
30	435	34.0	493	0.02396	64048	2353	0.00621	118362	4349	0.01059	93850	3448
31	450	35.1	509	0.02321	66121	2430	0.00589	123485	4537	0.01015	97401	3579
32	464	36.2	525	0.02251	68192	2506	0.00558	128842	4734	0.00978	100769	3703
33	479	37.3	541	0.02184	70265	2582	0.00530	134195	4931	0.00948	103894	3817
34	493	38.4	557	0.02122	72337	2658	0.00508	139076	5110	0.00910	107593	3953
35	508	39.5	573	0.02063	74410	2734	0.00478	145413	5343	0.00875	111285	4089
36	522	40.6	589	0.02007	76480	2810	0.00455	151104	5552	0.00847	114673	4214
37	537	41.7	605	0.01954	78554	2886	0.00430	157526	5788	0.00820	118114	4340
38	551	42.8	621	0.01904	80625	2962	0.00409	163636	6013	0.00794	121605	4468
39	566	43.9	637	0.01856	82697	3039	0.00385	170813	6276	0.00768	125225	4601
40	580	45.0	653	0.01811	84770	3115	0.00362	178349	6553	0.00743	128900	4736

Material specification

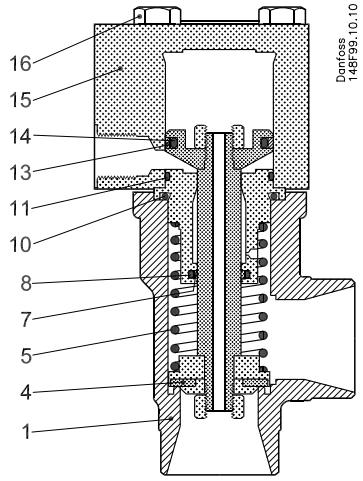

POV 600

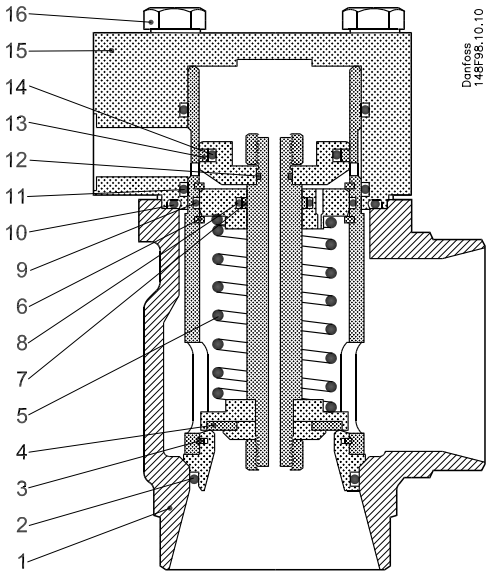

POV 1050, POV 2150

No	Part	Material	EN	ISO	ASTM
1	Housing	Steel	P285QH EN 10222-4		LF2, A350
2	O-ring	Cloropren (Neopren)			
3	Spring ring	Steel			
4	Telfon washer	PTFE(Teflon)			
5	Spring	Steel			
6	Seeger	Steel			
7	Glide ring	PTFE(Teflon)			
8-12	O-ring	Cloropren (Neopren)			
13	Glide ring	PTFE(Teflon)			
14	O-ring	Cloropren (Neopren)			
15	Top cover	Steel	P275NL1 EN 10028-3		Grade A, A662
16	Bolt	Stainless steel	A2-70 1515-1	A2-70 3506	Grade B8 A320

Connections

DIN

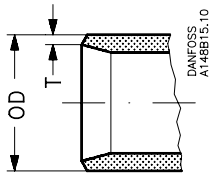

Welding DIN (2448)

Version	Size mm	Size in.	OD mm	T mm	OD in.	T in.	
POV 600	40	1½	48.3	2.6	1.902	0.103	
POV 1050	65	2 1/2	76.1	2.9	3	0.11	
POV 2150	80	3	88.9	3.2	3.5	0.13	

ANSI

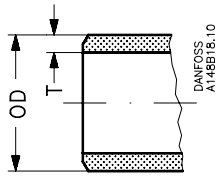

Welding ANSI (B 36.10)

POV 600	40	1½	48.3	5.1	1.902	0.201	Schedule 80
POV 1050	65	2 1/2	73	5.2	2.87	0.2	Schedule 40
POV 2150	80	3	88.9	5.5	3.5	0.22	Schedule 40

Dimensions and weights

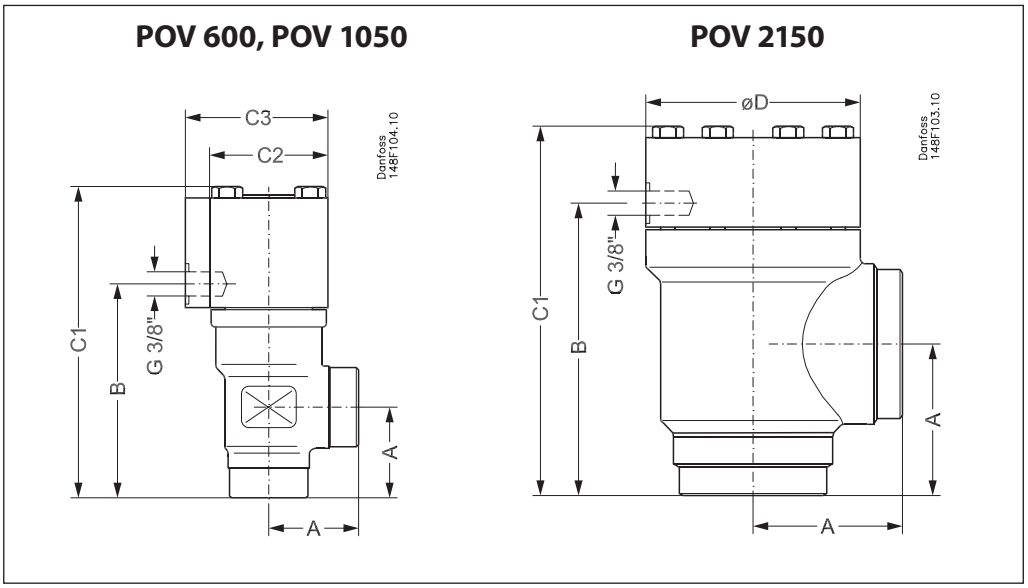

Valve size		A	B	C1	C2	C3	ØD	Weight
POV 600 1 1/2 in	mm	55	130	188	73	88		5 kg
	in	2.2	5.1	7.4	2.8	3.5		
POV 1050 2 1/2 in.	mm	70	137	184	90	105		6 kg
	in	2.8	5.4	7.2	3.5	4.1		
POV 2150 3 in.	mm	90	174	219			130	11 kg
	in	3.5	6.9	8.6			5.1	

Specified weights are approximate values only.

Ordering

Type	Code no.
POV 600 BUTT WELD DIN DN 40	**2417+232**
POV 600 BUTT WELD ANSI DN 40	**2417+047**
POV 1050 BUTT WELD DIN DN 65	**148F3026**
POV 1050 BUTT WELD ANSI DN 65	**148F3027**
POV 2150 BUTT WELD DIN DN 80	**148F3033**
POV 2150 BUTT WELD ANSI DN 80	**148F3034**

Nipples and gaskets

Attention: Fittings for connections must be ordered separately

Size		Type	Code no.
mm	in.	For system POV + BSV	
15	½	Set of fittings	**148H3453**

Important!

Where products need to be certified according to specific certification societies or where higher pressures are required, the relevant information should be included at the time of order.

Danfoss can accept no responsibility for possible errors in catalogues, brochures and other printed material. Danfoss reserves the right to alter its products without notice. This also applies to products already on order provided that such alterations can be made without subsequential changes being necessary in specifications already agreed.
All trademarks in this material are property of the respective companies. Danfoss and the Danfoss logotype are trademarks of Danfoss A/S. All rights reserved.